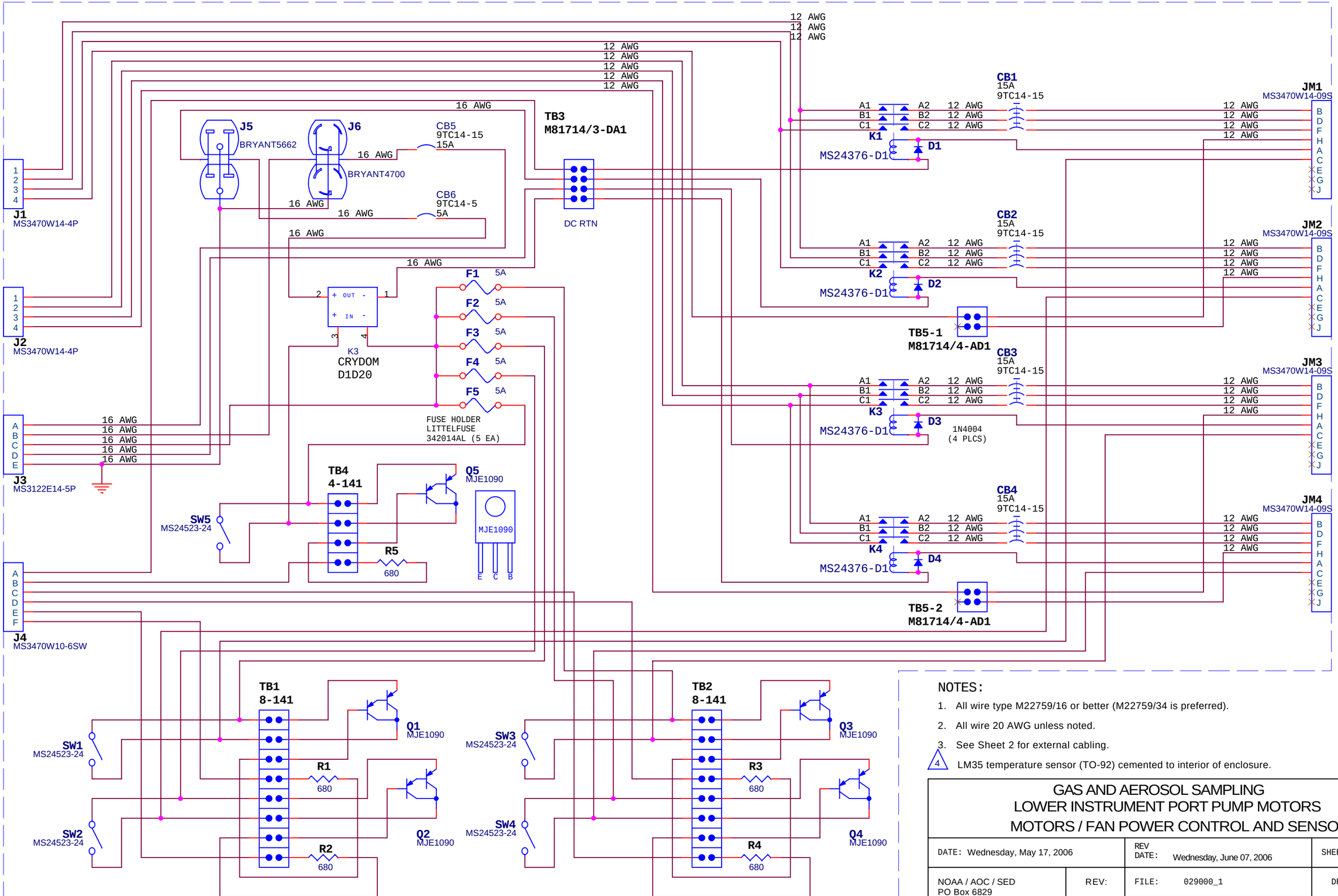

NOTES:

1. All wire type M22759/16 or better (M22759/34 is preferred).
2. All wire 20 AWG unless noted.
3. See Sheet 2 for external cabling.
4. LM35 temperature sensor (TO-92) cemented to interior of enclosure.

GAS AND AEROSOL SAMPLING
LOWER INSTRUMENT PORT PUMP MOTORS
MOTORS / FAN POWER CONTROL AND SENSORS

DATE: Wednesday, May 17, 2006		REV DATE: Wednesday, June 07, 2006	SHEET 1 OF 3
NOAA / AOC / SED PO Box 6829 MacDill AFB, FL 33608	REV: -	FILE: 029000_1	DRAWING NUMBER
		ENG: JED / APP:	WD-029000-A

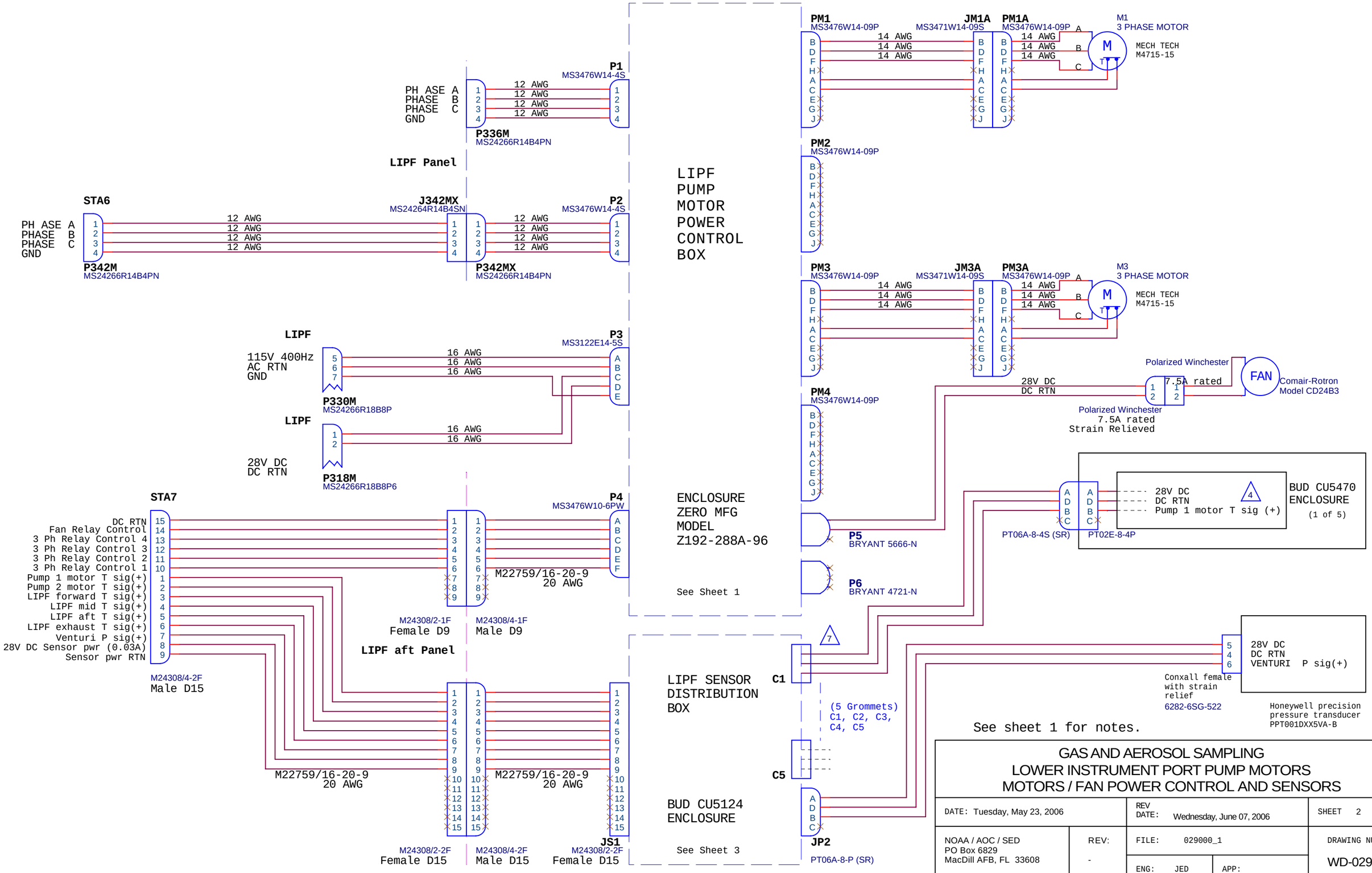

See sheet 1 for notes.

GAS AND AEROSOL SAMPLING LOWER INSTRUMENT PORT PUMP MOTORS MOTORS / FAN POWER CONTROL AND SENSORS			
DATE: Tuesday, May 23, 2006	REV DATE: Wednesday, June 07, 2006		SHEET 2 OF 3
NOAA / AOC / SED PO Box 6829 MacDill AFB, FL 33608	REV: -	FILE: 029000_1	DRAWING NUMBER
		ENG: JED / APP:	WD-029000-A

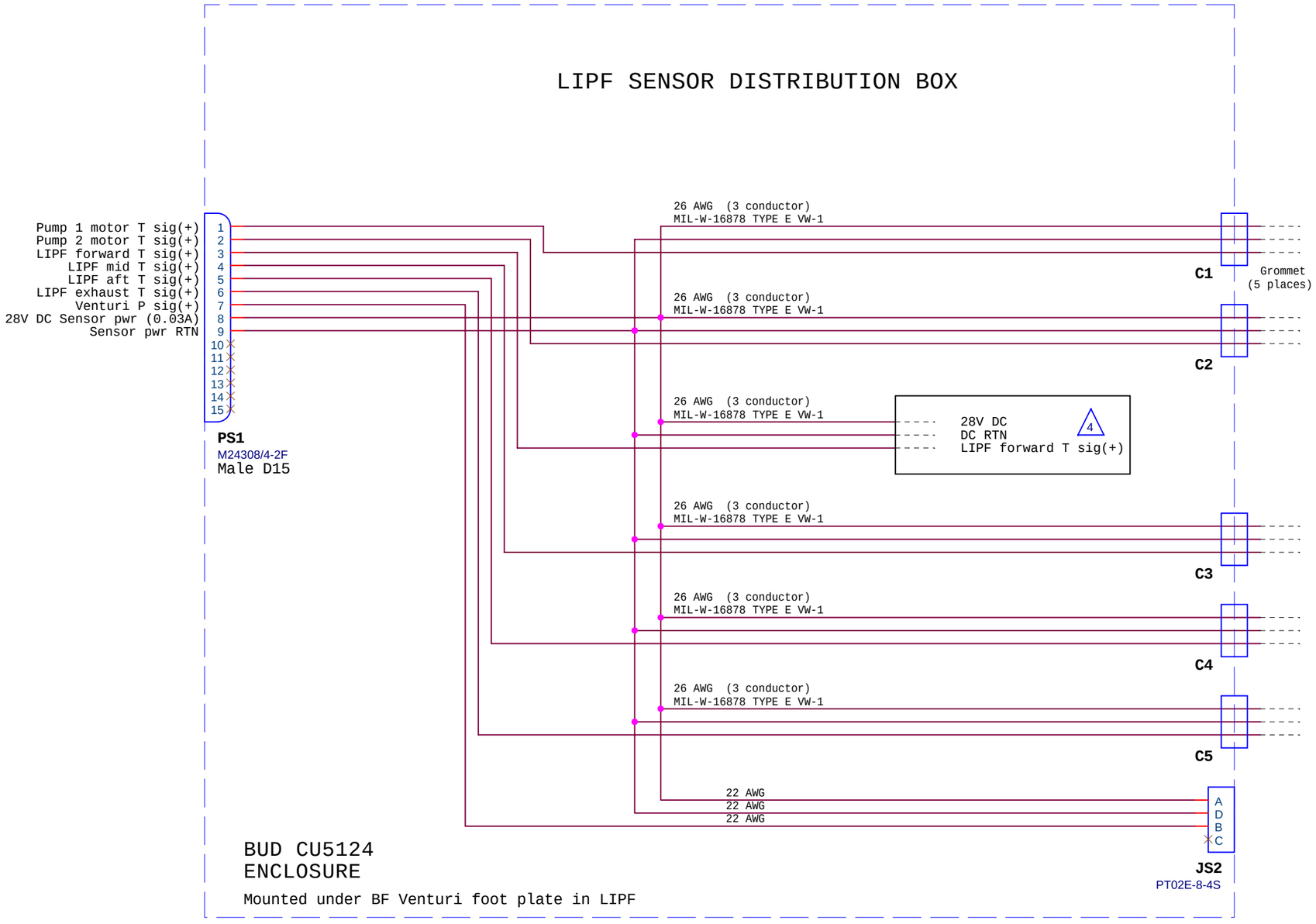

See sheet 1 for notes.

GAS AND AEROSOL SAMPLING
LOWER INSTRUMENT PORT PUMP MOTORS
MOTORS / FAN POWER CONTROL AND SENSORS

DATE: Tuesday, May 30, 2006		REV DATE: Wednesday, June 07, 2006	SHEET 3 OF 3
NOAA / AOC / SED PO Box 6829 MacDill AFB, FL 33608	REV: -	FILE: 029000_1 ENG: JED APP:	DRAWING NUMBER WD-029000-A